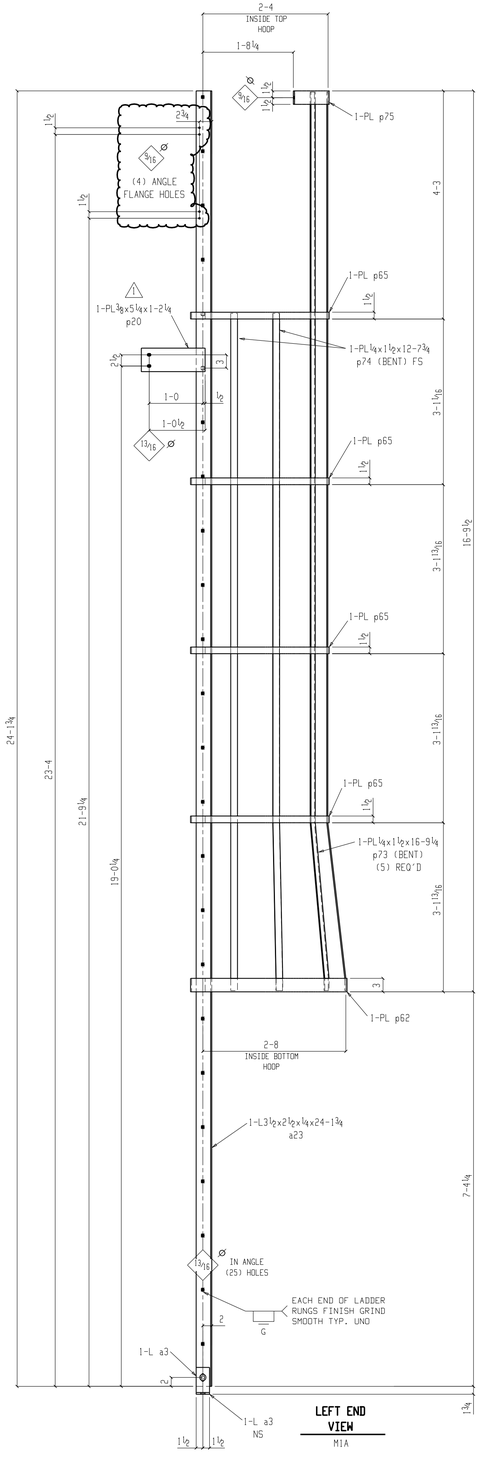


**LEFT END VIEW**
M1A

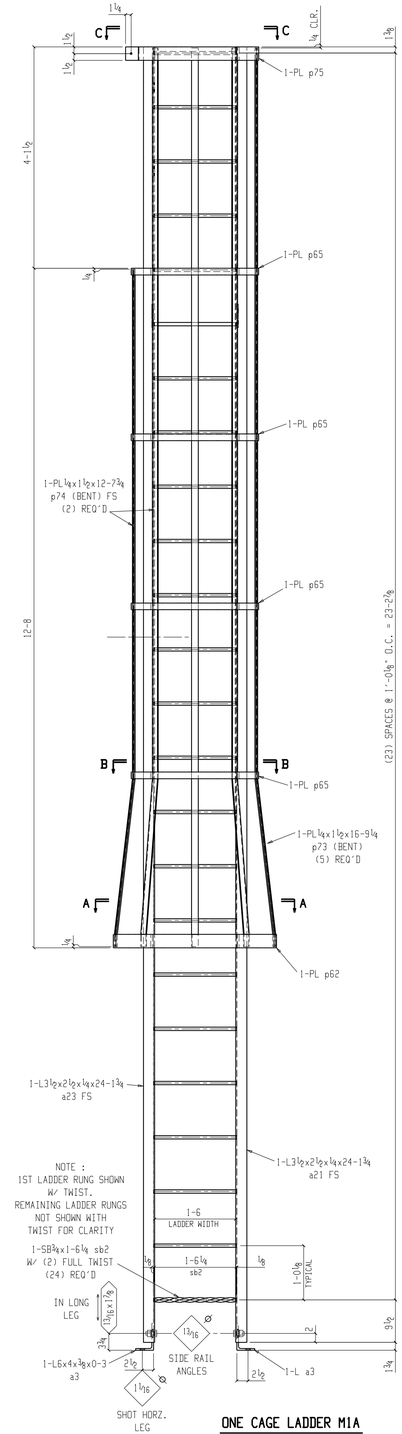


**ONE CAGE LADDER M1A**

SHOP BOLTS:
2-¾x2 A325

NOTE:
sb = SQUARE BAR

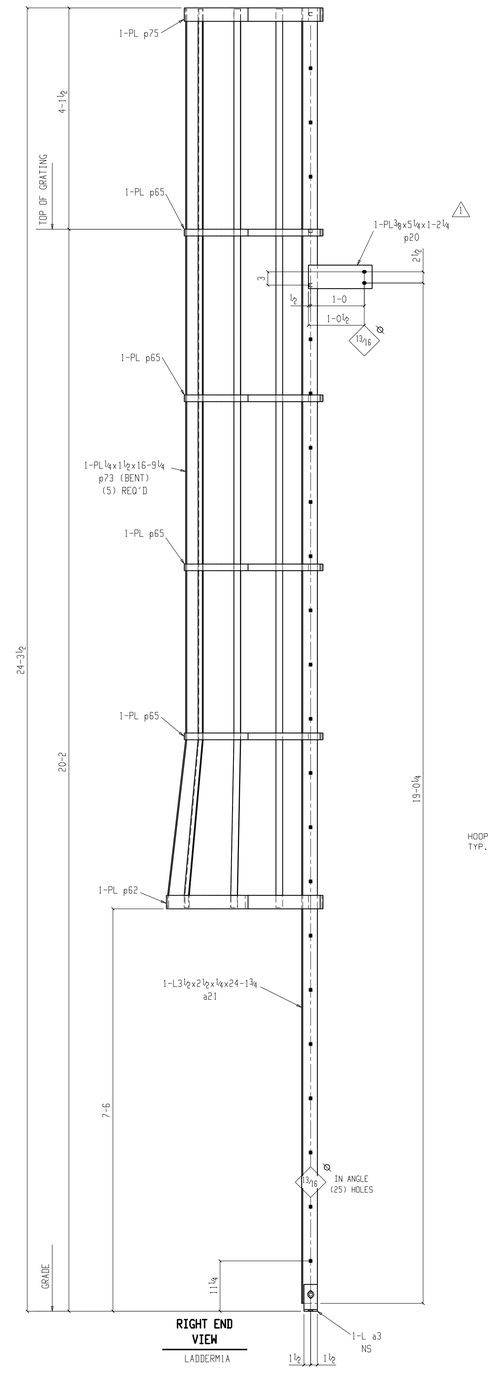


**RIGHT END VIEW**
LADDERM1A

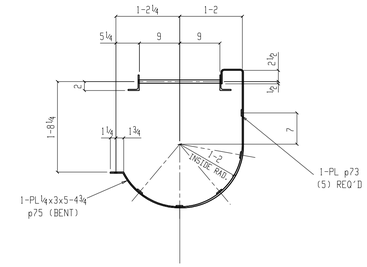


**Section C-C**
LADDERM1A

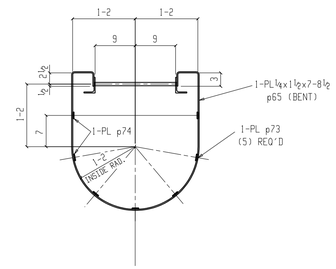


**Section B-B**
LADDERM1A

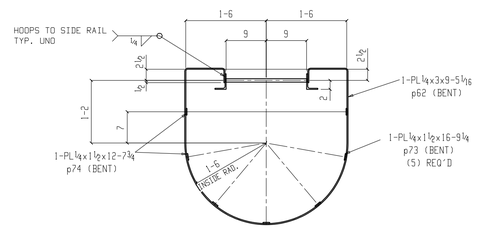


**Section A-A**
LADDERM1A

DRAWING REVIEW / APPROVAL

NEW CENTURY ENGINEERING HAS MADE EVERY EFFORT TO CORRECTLY AND COMPLETELY INCORPORATE THE INTENT OF THE CONTRACT DOCUMENTS. APPROVAL BY THE CLIENTS REPRESENTATIVE SHALL CONSTITUTE ACCEPTANCE. ANY POST-APPROVAL CHANGES WILL BE CONSIDERED TO BE CONTRACT CHANGES.

NEW CENTURY ENGINEERING AND DESIGN
3106 E. VANTAGE PT. DR.
MIDLAND, MICH. 48640
PHONE : (989) 633-3331
FAX : (989) 633-3334
serskine@newcenturyeng.com

FOR: company name
**project name**
city, state

TITLE: STRUCTURAL STEEL DETAILS
project name
xxxxx

DRAWN BY: – CHKD BY: – DATE: –

START DATE:
NCED JOB NO. –
REVISIONS
NO. DATE
DWG. NO. X