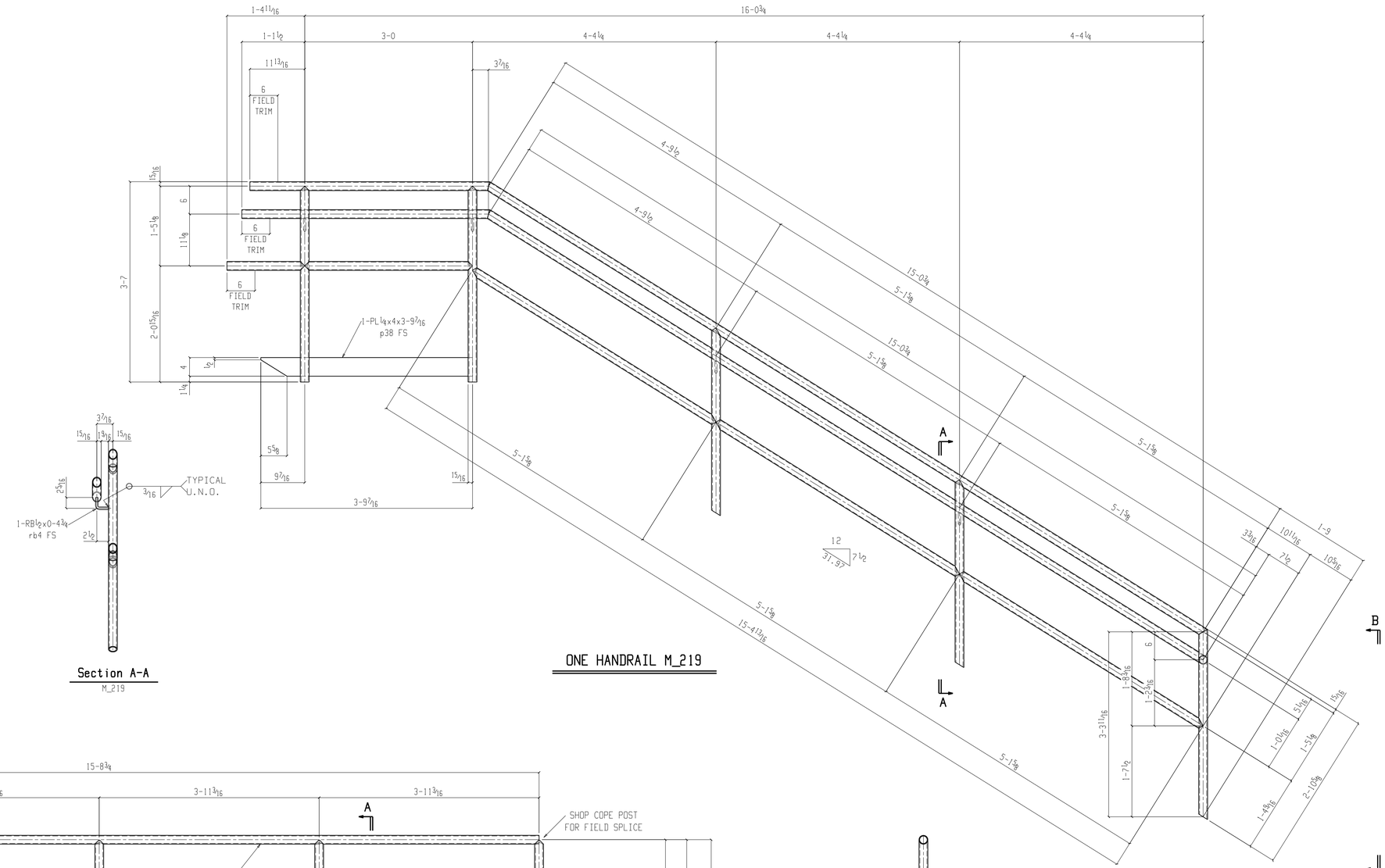

Section A-A

M_219

ONE HANDRAIL M_219

Section B-B

M_219

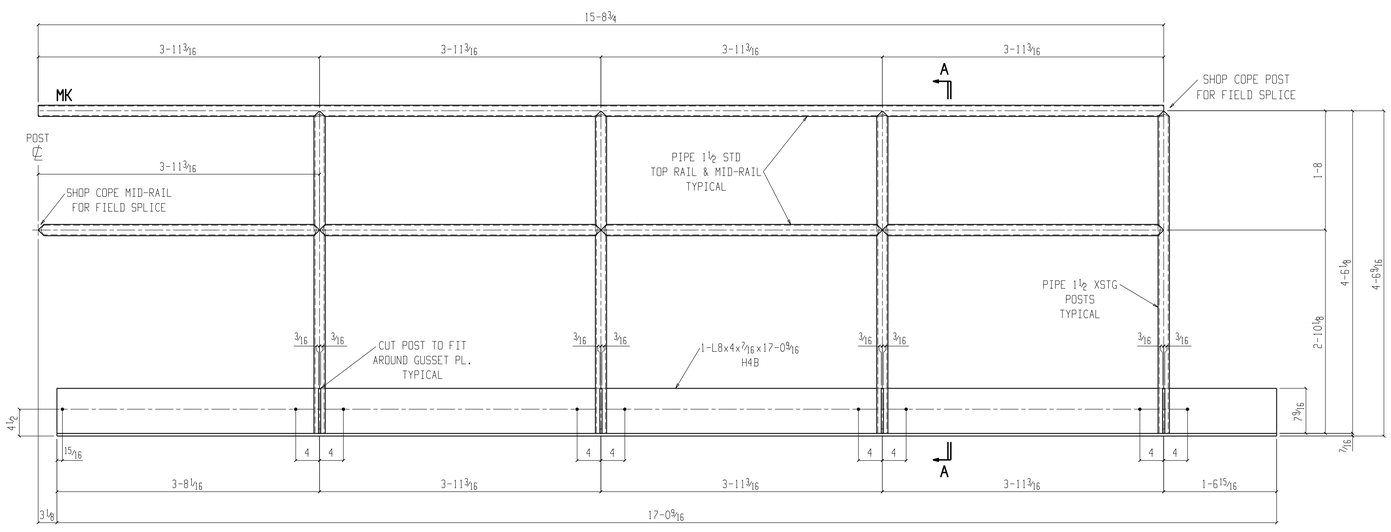

ONE ROOF GUARDRAIL H4B

3/16 TYPICAL HOLES U.N.O.

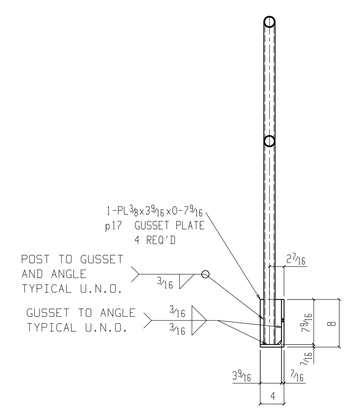

Section A-A

H4B

DRAWING REVIEW / APPROVAL

NEW CENTURY ENGINEERING HAS MADE EVERY EFFORT TO CORRECTLY AND COMPLETELY INCORPORATE THE INTENT OF THE CONTRACT DOCUMENTS. APPROVAL BY THE CLIENTS REPRESENTATIVE SHALL CONSTITUTE ACCEPTANCE. ANY POST-APPROVAL CHANGES WILL BE CONSIDERED TO BE CONTRACT CHANGES.

NEW CENTURY ENGINEERING AND DESIGN
3106 E. VANTAGE PT. DR.
MIDLAND, MICH. 48640
PHONE : (989) 633-3331
FAX : (989) 633-3334
serskine@newcenturyeng.com

FOR: company name
project name
city, state

TITLE: STRUCTURAL STEEL DETAILS
project name
xxxxx

DRAWN BY: – CHKD BY: – DATE: –

START DATE:

REVISIONS

NO.	DATE

NCED JOB NO. –

DWG. NO. X