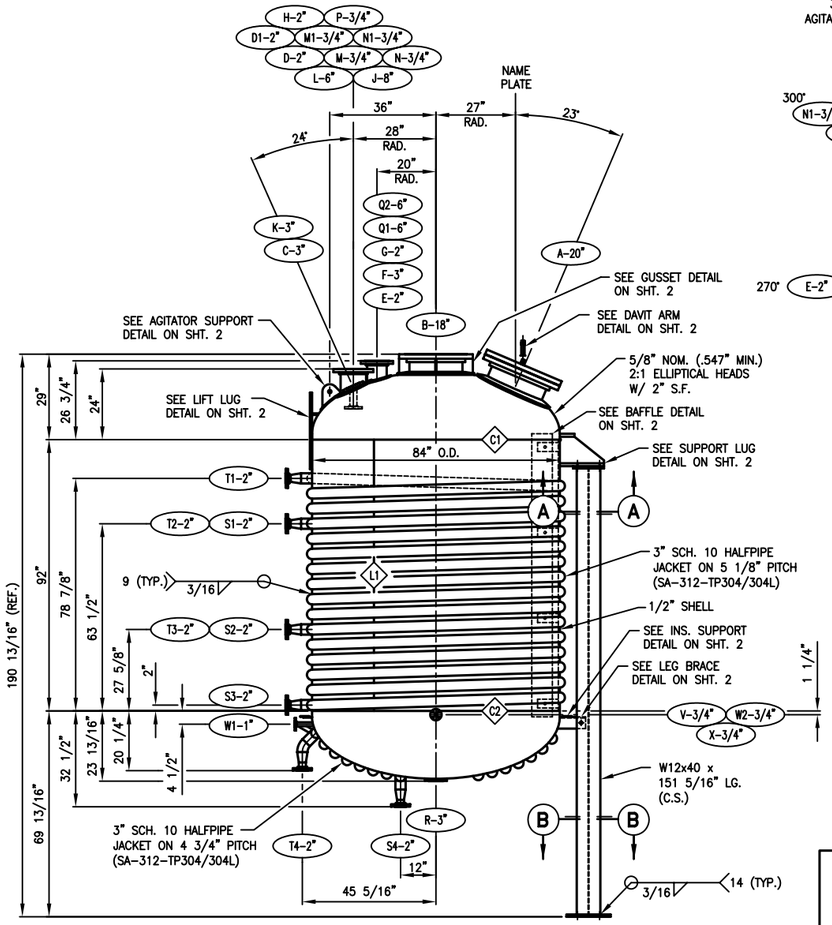

ELEVATION VIEW

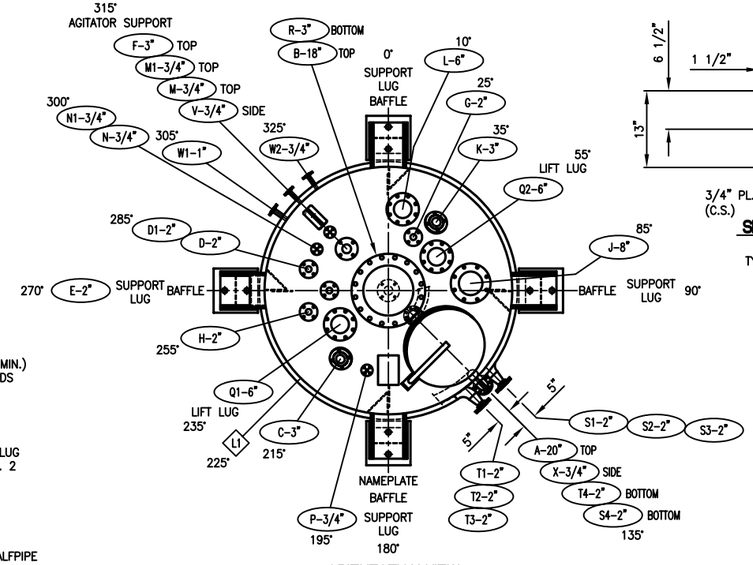

ORIENTATION VIEW

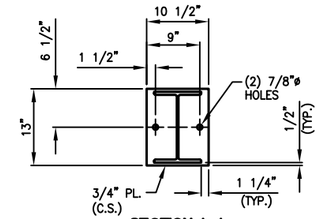

SECTION A-A
SCALE: 2X
TYP. (4) PLACES

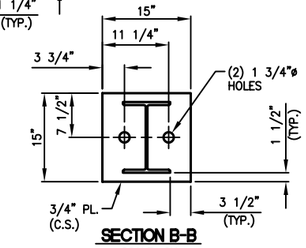

SECTION B-B
SCALE: 2X
TYP. (4) PLACES

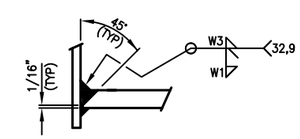

J7 DETAIL

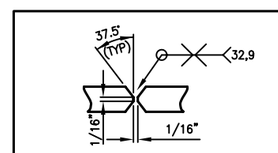

Lx DETAIL

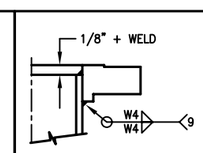

J2 DETAIL

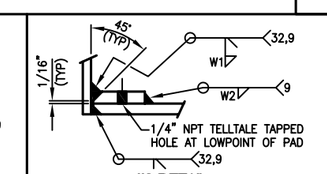

J10 DETAIL

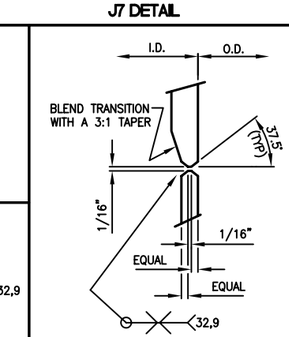

Cx DETAIL

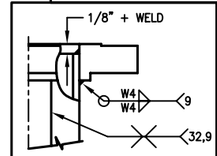

J3 DETAIL

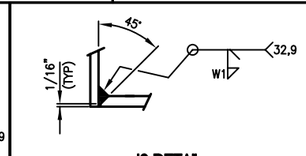

J6 DETAIL

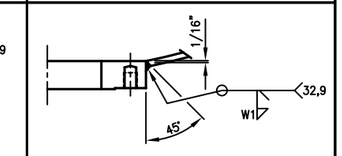

J22 DETAIL

GENERAL NOTES:

1. THIS VESSEL IS DESIGNED, CONSTRUCTED, AND CODE STAMPED PER ASME SECT. VIII, DIV. 1, 2007 EDITION.
2. ALL NOZZLE BOLT HOLES ARE TO STRADDLE THE MAJOR VESSEL CENTERLINES UNLESS SPECIFICALLY NOTED OTHERWISE.
3. ALL NOZZLE GASKET SURFACES REQUIRE A SERRATED SURFACE FINISH OF 125 TO 250 RMS.
4. SCRIBING OR CENTER PUNCHING OF WORK LINES IS PROHIBITED.
5. BREAK ALL SHARP EDGES.
6. ALL C.S. IS TO BE SA-36(MIN) UNLESS NOTED OTHERWISE.

THIS VESSEL CONFORMS TO THE LATEST ASME UNFIRED PRESSURE VESSEL CODE AND UNDER NO CIRCUMSTANCES SHALL THE SAFETY DEVICES BE SET AT GREATER THAN THE MAXIMUM ALLOWABLE WORKING PRESSURE.

PRESSURE VESSEL DATA			
	VESSEL	JACKET	COIL
MAWP (PSIG) @ DESIGN TEMP (°F)	150/FV @ 450	150/FV @ 450	–
MDMT (° F) @ MAWP (PSIG)	–20 @ 150/FV	–20 @ 150/FV	–
HYDROSTATIC TEST PRESSURE (PSIG)	225	225	–
CORROSION ALLOWANCE (IN.)	NONE	NONE	–
RADIOGRAPHY/MEETS UW-11(a)(5)(b)	SPOT/NO	NONE/NO	–
STRESS RELIEF	NONE	NONE	–
STRENGTH LIMITING VESSEL PART	SHELL	DESIGN	–
WIND DESIGN	–		
SEISMIC DESIGN	–		
EMPTY/FULL WEIGHT OF SG 1.5	14,415# / 53,330#		
FULL VOLUME (GALLONS)	2,983		
GENERAL DATA			
HEAD PLATE MAT'L, ASME	SA-240-304/304L	–	–
SHELL PLATE MAT'L, ASME	SA-240-304/304L	–	–
JACKET MAT'L, ASME	–	SA-312-TP304/304L	–
BOLT MAT'L, ASME	SA-193-B7		
NUT MAT'L, ASME	SA-194-2H		
SHIPPING GASKET MAT'L	–		
SERVICE GASKET MAT'L	1/8" GYLON 3510		

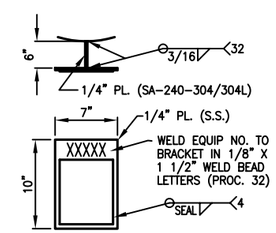

NAME PLATE

SERVICE	MARK	QUAN	SIZE	MATERIAL	RATING	TYPE	MATERIAL	TH'KN	LENGTH	MATERIAL	TH'KN X WIDTH	MATERIAL	HH BORE	#BOLTS	#STUDS	DESCRIPTION	#NUTS	#SHIP	#SERV.	FLANGE	NECK	W1	W2	W3	W4	L1	EXTERNAL	INTERNAL	MARK	COMMENTS
				FLANGE			NECK			REPAD		BLIND/HIGH HUB		BOLTS/STUDS/NUTS				GASKETS		JOINT FIG.		WELDS					PROJECTIONS			
TEMP.	X	1	3/4"	SA-182-F304/304L	150#	RFSO	SA-312-TP304/304L	SCH. 40	6 5/16"	–	–	–	–	–	–	–	–	–	–	J2	J6	3/16"	–	–	3/16"	–	6"	FLUSH	X	–
INLET	W2	1	3/4"	SA-182-F304/304L	150#	RFSO	SA-312-TP304/304L	SCH. 40	6 5/16"	–	–	–	–	–	–	–	–	–	–	J2	J6	3/16"	–	–	3/16"	–	6"	FLUSH	W2	–
SAMPLE	W1	1	1"	SA-182-F304/304L	150#	RFSO	SA-312-TP304/304L	SCH. 40	6 5/16"	–	–	–	–	–	–	–	–	–	–	J2	J6	3/16"	–	–	3/16"	–	6"	FLUSH	W1	W/ 3/16" THK. S.S. GUSSET (CUT TO FIT)
TEMP.	V	1	3/4"	SA-182-F304/304L	150#	RFSO	SA-312-TP304/304L	SCH. 40	6 5/16"	–	–	–	–	–	–	–	–	–	–	J2	J6	3/16"	–	–	3/16"	–	6"	FLUSH	V	–
JACKET	T1–T4	4	2"	SA-182-F304/304L	300#	RFSO	SA-312-TP304/304L	SCH. 10	SEE DET.	–	–	–	–	–	–	–	–	–	–	J2	DET.	–	–	–	3/16"	–	9"	–	T1–T4	–
JACKET	S1–S4	4	2"	SA-182-F304/304L	300#	RFSO	SA-312-TP304/304L	SCH. 10	SEE DET.	–	–	–	–	–	–	–	–	–	–	J2	DET.	–	–	–	3/16"	–	9"	–	S1–S4	–
OUTLET	R	1	3"	SA-182-F304/304L	150#	STUDDING OUTLET	–	–	–	–	–	–	–	–	–	–	–	–	–	–	J22	3/8"	–	–	–	–	–	FLUSH	R	–
SPRAY	Q1–Q2	2	6"	SA-182-F304/304L	150#	RFSO	SA-312-TP304/304L	SCH. 40	8 1/2"	SA-240-304/304L	1/4" x 1 1/2"	–	–	–	–	–	–	–	–	J2	J10	1/4"	1/4"	–	5/16"	–	SEE ELEV.	FLUSH	Q1–Q2	–
INLET	P	1	3/4"	SA-182-F304/304L	150#	RFSO	SA-312-TP304/304L	SCH. 40	7 15/16"	–	–	–	–	–	–	–	–	–	–	J2	J6	3/16"	–	–	3/16"	–	SEE ELEV.	FLUSH	P	–
INLET	N1	1	3/4"	SA-182-F304/304L	150#	RFSO	–	–	–	–	–	–	–	–	–	–	–	–	–	J2	–	–	–	–	3/16"	–	–	6 1/4"	N1	–
INLET	N	1	3/4"	SA-182-F304/304L	150#	RFSO	SA-312-TP304/304L	SCH. 40	12 5/8"	–	–	–	–	–	–	–	–	–	–	J2	J7	3/16"	–	3/16"	3/16"	–	SEE ELEV.	5 15/16"	N	–
INLET	M1	1	3/4"	SA-182-F304/304L	150#	RFSO	–	–	–	–	–	–	–	–	–	–	–	–	–	J2	–	–	–	–	3/16"	–	–	6 1/4"	M1	–
INLET	M	1	3/4"	SA-182-F304/304L	150#	RFSO	SA-312-TP304/304L	SCH. 40	12 5/8"	–	–	–	–	–	–	–	–	–	–	J2	J7	3/16"	–	3/16"	3/16"	–	SEE ELEV.	5 15/16"	M	–
OUTLET	L	1	6"	SA-182-F304/304L	150#	RFSO	SA-312-TP304/304L	SCH. 40	9 5/16"	SA-240-304/304L	1/4" x 1 1/2"	–	–	–	–	–	–	–	–	J2	J10	1/4"	1/4"	–	5/16"	–	SEE ELEV.	FLUSH	L	–
SIGHTGLASS	K	1	3"	SA-182-F304/304L	150#	STUDDING OUTLET	–	–	–	–	–	–	–	–	–	–	–	–	–	–	J22	3/8"	–	–	–	–	–	FLUSH	K	–
PRESS.	J	1	8"	SA-182-F304/304L	150#	RFSO	SA-312-TP304/304L	SCH. 40	9 7/8"	SA-240-304/304L	3/8" x 2"	–	–	–	–	–	–	–	–	J2	J10	3/8"	3/8"	–	5/16"	–	SEE ELEV.	FLUSH	J	–
INLET	H	1	2"	SA-182-F304/304L	150#	RFSO	SA-312-TP304/304L	SCH. 40	9 5/16"	–	–	–	–	–	–	–	–	–	–	J2	J7	3/16"	–	3/16"	3/16"	–	SEE ELEV.	2 9/16"	H	–
SPARE	G	1	2"	SA-182-F304/304L	150#	RFSO	SA-312-TP304/304L	SCH. 40	8 15/16"	–	–	SA-182-F304/304L	–	–	4	5/8" x 3"	8	–	1	J2	J7	3/16"	–	3/16"	3/16"	–	SEE ELEV.	2 5/16"	G	–
SPARE	F	1	3"	SA-182-F304/304L	150#	RFSO	SA-312-TP304/304L	SCH. 40	8 1/16"	–	–	SA-182-F304/304L	–	–	4	5/8" x 3 1/2"	8	–	1	J2	J6	1/4"	–	–	1/4"	–	SEE ELEV.	FLUSH	F	–
PRESS.	E	1	2"	SA-182-F304/304L	150#	RFSO	SA-312-TP304/304L	SCH. 40	7 15/16"	–	–	–	–	–	–	–	–	–	–	J2	J6	3/16"	–	–	3/16"	–	SEE ELEV.	FLUSH	E	–
INLET	D1	1	2"	SA-182-F304/304L	150#	RFSO	–	–	–	–	–	–	–	–	–	–	–	–	–	J2	–	–	–	–	3/16"	–	–	6 9/16"	D1	–
INLET	D	1	2"	SA-182-F304/304L	150#	RFSO	SA-312-TP304/304L	SCH. 40	13"	–	–	–	–	–	–	–	–	–	–	J2	J7	3/16"	–	3/16"	3/16"	–	SEE ELEV.	6 1/4"	D	–
SIGHTGLASS	C	1	3"	SA-182-F304/304L	150#	STUDDING OUTLET	–	–	–	–	–	–	–	–	–	–	–	–	–	–	J22	3/8"	–	–	–	–	–	FLUSH	C	–
AGITATOR	B	1	18"	SA-182-F304/304L	150#	RFSO	SA-240-304/304L	3/4" PL.	SEE COM.	SA-240-304/304L	1/2" x 4"	–	–	–	–	–	–	–	–	J3	J10	3/8"	3/8"	–	3/4"	–	SEE ELEV.	FLUSH	B	3/4" PL. x 7 1/4" x 54 3/16" LG.
MANWAY	A	1	20"	SA-182-F304/304L	150#	RFSO	SA-240-304/304L	1/2" PL.	SEE COM.	SA-240-304/304L	1/2" x 3 1/2"	SA-182-F304/304L	–	–	20	1 1/8" x 6"	40	–	1	J3	J10	3/8"	3/8"	–	1/2"	–	6"	FLUSH	A	1/2" PL. x 8 1/4" x 61 1/4" LG.

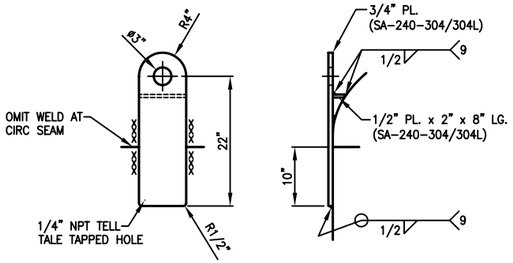

LIFT LUG DETAIL
(2) REQ'D

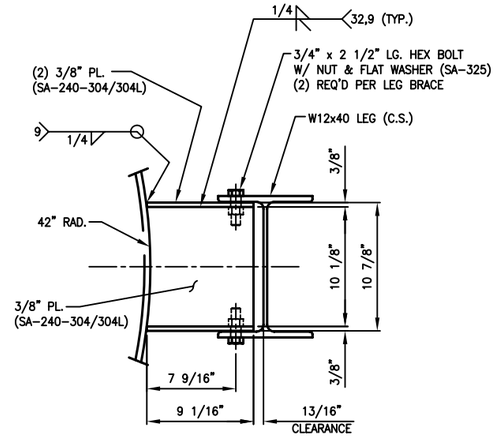

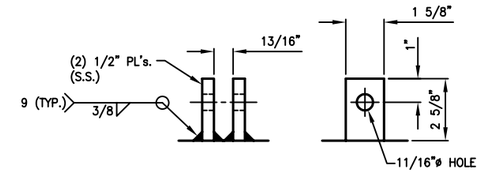

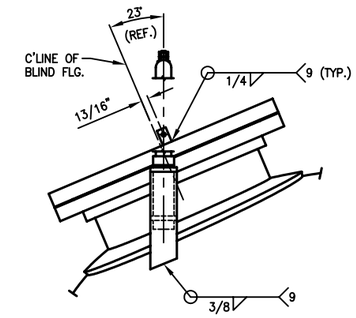

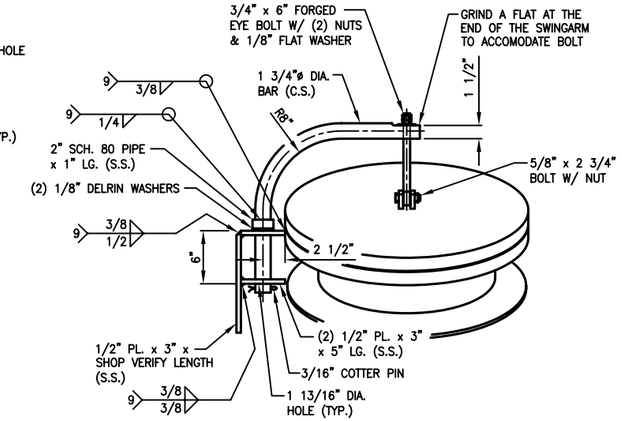

NOZZLE A-20" DAVIT ARM DETAIL
SCALE: 3X

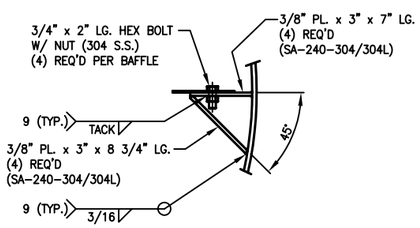

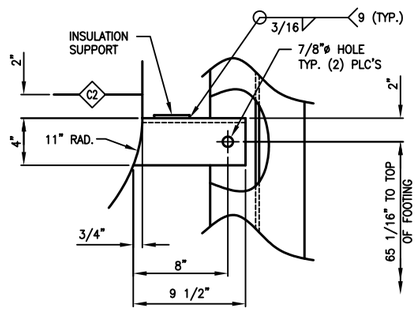

LEG BRACE DETAIL
SCALE: 4X
TYP. (4) PLACES
0°,90°,180°,& 270°

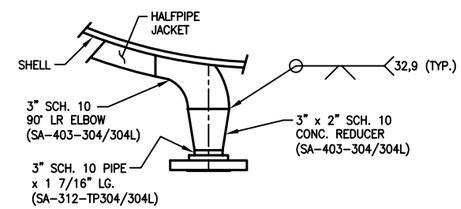

NOZZLES T1, T2, T3, S1, S2, & S3 DETAIL
SCALE: 4X
(6) REQ'D

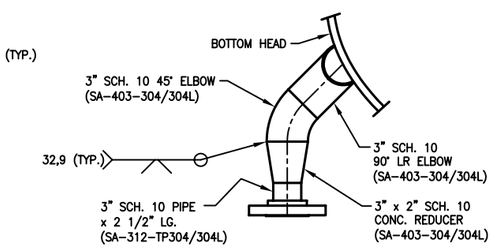

NOZZLE T4 DETAIL
SCALE: 4X
(1) REQ'D

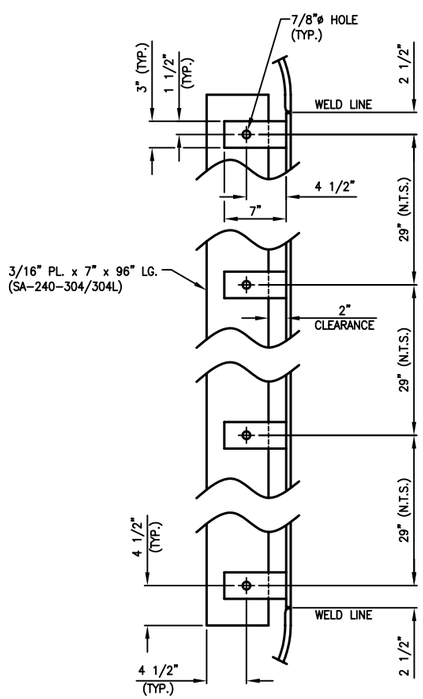

BAFFLE DETAIL
SCALE: 3X
(4) REQ'D @ 0°,90,180°,& 270°

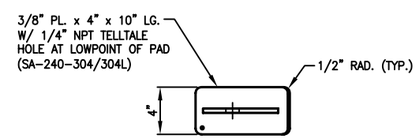

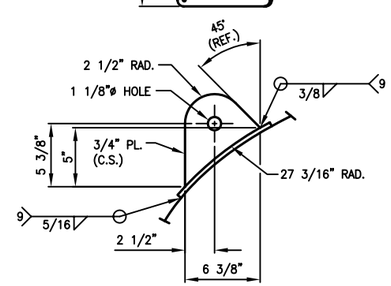

AGITATOR SUPPORT DETAIL
SCALE: 4X
(1) REQ'D

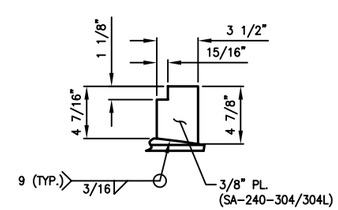

NOZZLE B-18" GUSSET DETAIL
SCALE: 4X
TYP. (4) PLACES
0°,90°,180°,& 270°

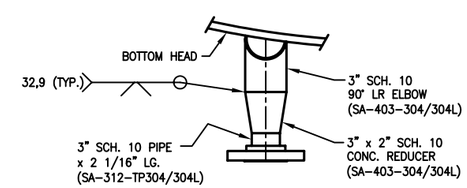

NOZZLE S4 DETAIL
SCALE: 4X
(1) REQ'D

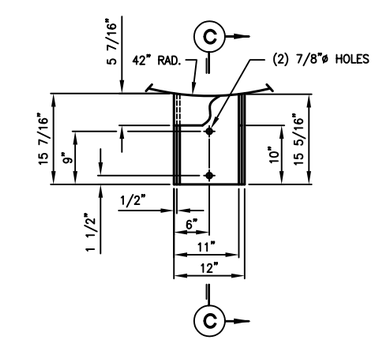

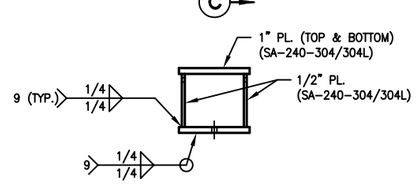

SUPPORT LUG DETAIL
SCALE: 2X
(4) REQ'D

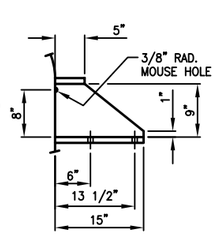

SECTION C-C
SCALE: 2X

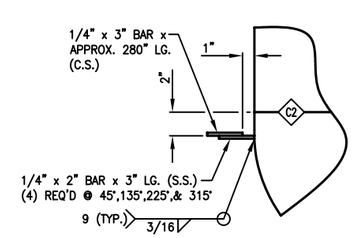

INSULATION SUPPORT DETAIL
SCALE: 4X